Turbo Tiltable

Product Images

APPLICATION AREAS:

Residential,Office buildings,Retail,Sports facilities,Studio, Stage,Supermarkets,Library





TECHNICAL SPECIFICATIONS

PRODUCT REFRENCE

ITEM CODE	Turbo Tiltable 12
ENVIRONMENT	Indoor
INSTALLATION	Surface

CONSTRUCTION AND MATERIALS

SIZE OUT SIDE MM	80 MM DIA
CUT OUT SIZE (MM)	80X92
HOUSING	Die Cast Aluminium
LENS / DIFFUSER	High Transmission PMMA LENS
REFLECTOR	PC High Purity Metallised
SURFACE FINISH	White/Black/Custom Powder Coated
IP rating	20

THERMAL MANAGEMENT

HEAT SINK MATERIAL	Aluminium
COOLING TECHNIQUE	Passive

OPTICAL SYSTEM

BEAM ANGLE	24°,36°
ILLUMINATION MODE	Direct Lighting
SWIVEL	Yes

LIGHT TECHNOLOGY

LED FITTED	Bridgelux
DELIVERED LUMENS	1380 / 1320 / 1260
CCT (K)	6000 / 4000 / 3000
Tunable	On Request
LED BINNING	3 Step MacAdam
CRI (Ra)	80 / 90
LED LIFE L70	40,000 HRS
LUMINAIRE	1920 / 1860 / 1800
LUMINOUS FLUX	
LUMINOUS EFFICACY	115 Lumens / Watt

ELECTRICAL SYSTEM

(UGR)	<22
INPUT VOLTAGE	220 TO 240 Vac
INPUT POWER	12W
POWER FACTOR	>0.95
THD	<10%
CONTROL GEAR	Remote
MOUNTING	
DRIVER PROTECTION	OVP,Short Circuit,Surge
DIMMING	Phase / Analog / Dali / RF / APP
EMERGENCY	On Request
BATTERY BACKUP	

PACKAGING DETAILS

PACKING QTY -

GROSS WEIGHT -

CARTOON SIZE (LXBXH) -

DIMENSIONS

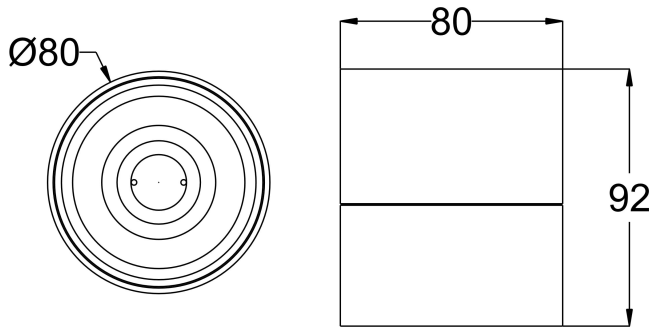

PHOTOMETRIC

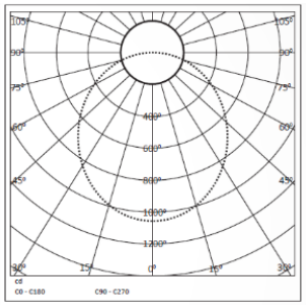

ARCADE LIGHTING

8 Raju industrial estate, Penkar pada, Near dahisar check naka, Mira road 401107

NOTE : The technical data sheet with design registration stamp is the property of Arcade Lighting & protected under Intellectual Property law, and it is restricted for sharing with other lighting suppliers