Swift

Product Images

APPLICATION AREAS:

Residential,Office buildings,Retail,Sports facilities,Studio, Stage,Supermarkets,Library



Dimming Optional | RF Control | Smart Lighting | CCT Tuning | Google or Alexa Voice

TECHNICAL SPECIFICATIONS

PRODUCT REFRENCE

ITEM CODE	Swift 25
ENVIRONMENT	Indoor
INSTALLATION	Recessed

CONSTRUCTION AND MATERIALS

SIZE OUT SIDE MM	130 MM DIA
CUT OUT SIZE (MM)	130X78
HOUSING	Die Cast Aluminium
LENS / DIFFUSER	High Transmission PMMA LENS
REFLECTOR	PC High Purity Metallised
SURFACE FINISH	White/Black/Custom Powder Coated
IP rating	20

THERMAL MANAGEMENT

HEAT SINK MATERIAL	Aluminium
COOLING TECHNIQUE	Passive

OPTICAL SYSTEM

BEAM ANGLE	24°,36°
ILLUMINATION MODE	Direct Lighting
SWIVEL	No

LIGHT TECHNOLOGY

LED FITTED	Bridgelux
DELIVERED LUMENS	2875 / 2750 / 2625
CCT (K)	6000 / 4000 / 3000
Tunable	On Request
LED BINNING	3 Step MacAdam
CRI (Ra)	80 / 90
LED LIFE L70	40,000 HRS
LUMINAIRE LUMINOUS FLUX	4000 / 3875 / 3750
LUMINOUS EFFICACY	115 Lumens / Watt

ELECTRICAL SYSTEM

(UGR)	<22
INPUT VOLTAGE	220 TO 240 Vac
INPUT POWER	25W
POWER FACTOR	>0.95
THD	<10%
CONTROL GEAR	Remote
MOUNTING	
DRIVER PROTECTION	OVP,Short Circuit,Surge
DIMMING	Phase / Analog / Dali / RF / APP
EMERGENCY BATTERY BACKUP	On Request

PACKAGING DETAILS

PACKING QTY -

GROSS WEIGHT -

CARTOON SIZE (LXBXH) -

DIMENSIONS

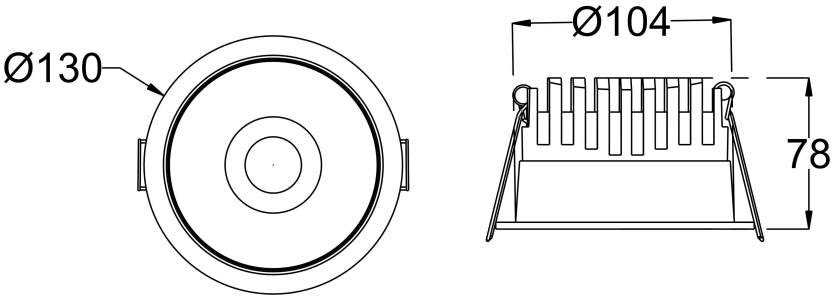

PHOTOMETRIC

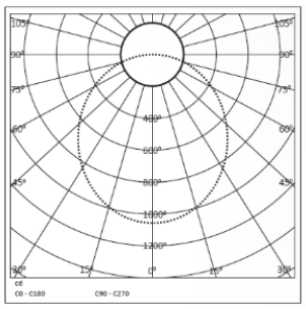

ARCADE LIGHTING

8 Raju industrial estate, Penkar pada, Near dahisar check naka, Mira road 401107

NOTE : The technical data sheet with design registration stamp is the property of Arcade Lighting & protected under Intellectual Property law, and it is restricted for sharing with other lighting suppliers