J Series

Product Images

APPLICATION AREAS:

Residential,Office buildings,Retail,Sports facilities,Studio, Stage,Supermarkets,Library



Dimming Optional | RF Control | Smart Lighting | CCT Tuning | Google or Alexa Voice

TECHNICAL SPECIFICATIONS

PRODUCT REFRENCE

ITEM CODE	J Series 7
ENVIRONMENT	Indoor
INSTALLATION	Recessed

CONSTRUCTION AND MATERIALS

SIZE OUT SIDE MM	72 MM DIA
CUT OUT SIZE (MM)	64X85
HOUSING	Die Cast Aluminium
LENS / DIFFUSER	High Transmission PMMA LENS
REFLECTOR	PC High Purity Metallised
SURFACE FINISH	White/Black/Custom Powder Coated
IP rating	20

THERMAL MANAGEMENT

HEAT SINK MATERIAL	Aluminium
COOLING TECHNIQUE	Passive

OPTICAL SYSTEM

BEAM ANGLE	24°,36°
ILLUMINATION MODE	Direct Lighting
SWIVEL	Yes

LIGHT TECHNOLOGY

LED FITTED	Bridgelux
DELIVERED LUMENS	805 / 770 / 735
CCT (K)	6000 / 4000 / 3000
Tunable	On Request
LED BINNING	3 Step MacAdam
CRI (Ra)	80 / 90
LED LIFE L70	40,000 HRS
LUMINAIRE LUMINOUS FLUX	1120 / 1085 / 1050
LUMINOUS EFFICACY	115 Lumens / Watt

ELECTRICAL SYSTEM

(UGR)	<22
INPUT VOLTAGE	220 TO 240 Vac
INPUT POWER	7W
POWER FACTOR	>0.95
THD	<10%
CONTROL GEAR	Remote
MOUNTING	
DRIVER PROTECTION	OVP,Short Circuit,Surge
DIMMING	Phase / Analog / Dali / RF / APP
EMERGENCY BATTERY BACKUP	On Request

PACKAGING DETAILS

PACKING QTY -

GROSS WEIGHT -

CARTOON SIZE (LXBXH) -

DIMENSIONS

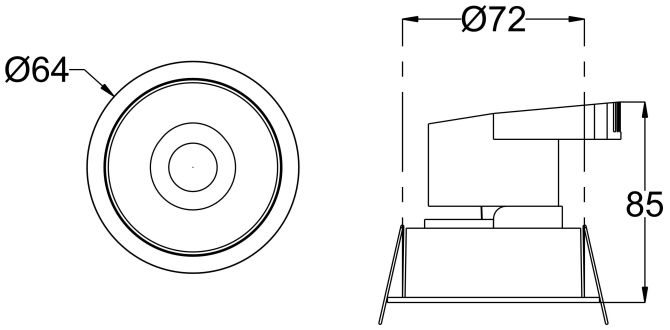

PHOTOMETRIC

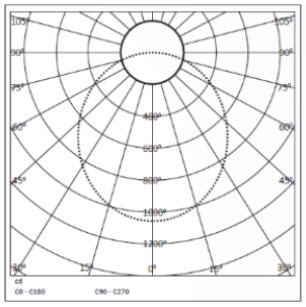

ARCADE LIGHTING

8 Raju industrial estate, Penkar pada, Near dahisar check naka, Mira road 401107

NOTE : The technical data sheet with design registration stamp is the property of Arcade Lighting & protected under Intellectual Property law, and it is restricted for sharing with other lighting suppliers